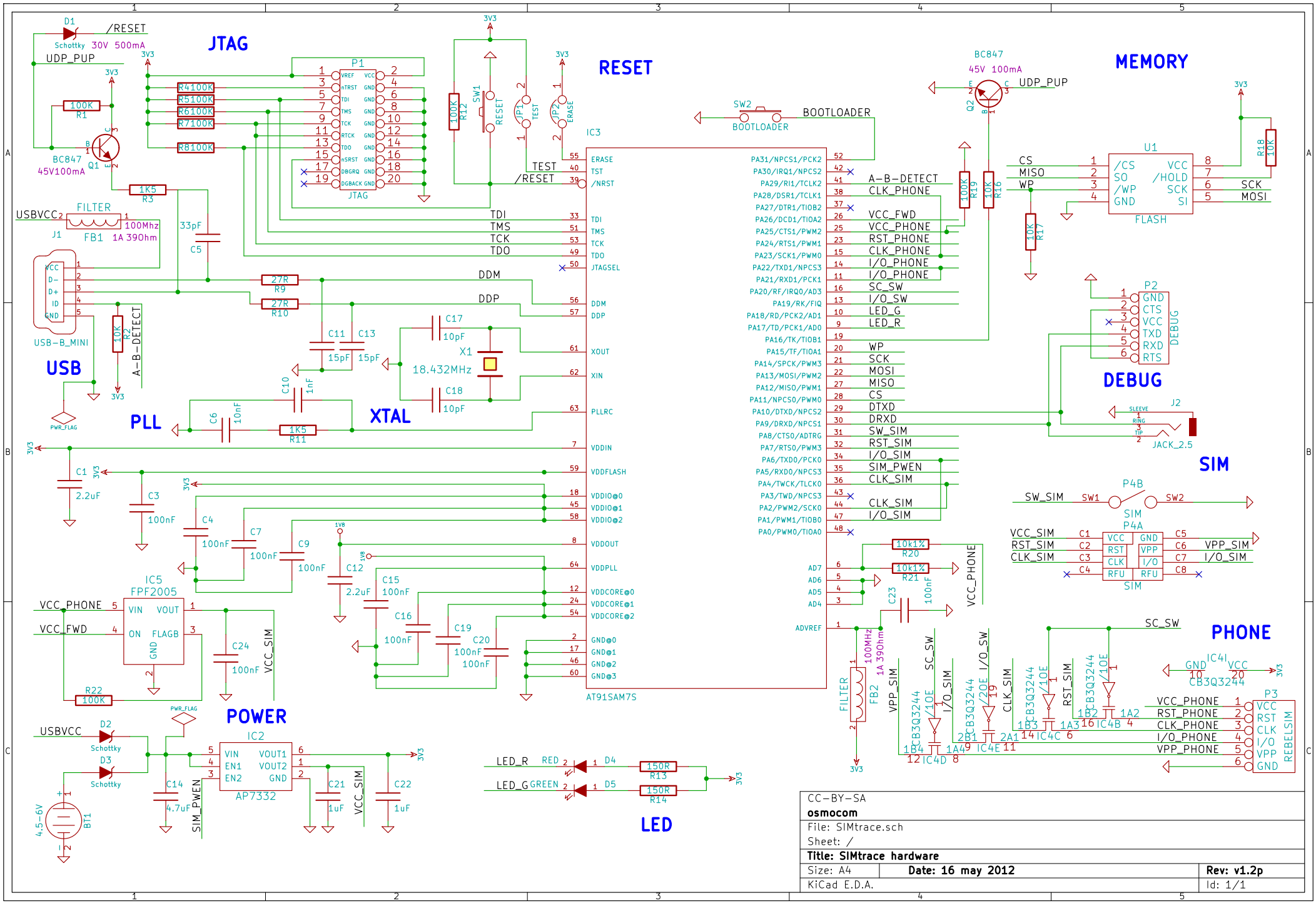
JTAG
RESET
MEMORY
USB
PLL
XTAL
DEBUG
SIM
PHONE
POWER
LED
AT91SAM7S
IC3
FLASH
U1
IC5
FPF2005
IC2
AP7332
IC4I
CB3Q3244
P1
P2
P3
P4A
P4B
J1
J2
USB-B_MINI
JACK_2.5
X1
18.432MHz
BC847
45V 100mA
UDP_PUP
BOOTLOADER
A-B-DETECT
CLK_PHONE
VCC_FWD
VCC_PHONE
RST_PHONE
I/O_PHONE
SC_SW
I/O_SW
LED_G
LED_R
WP
SCK
MOSI
MISO
CS
DTXD
DRXD
SW_SIM
RST_SIM
I/O_SIM
SIM_PWEN
CLK_SIM
VPP_SIM
VCC_SIM
SIM_PWEN
USBVCC
FILTER
FB1
FB2
100Mhz
1A 390hm
/RESET
Schottky 30V 500mA
BC847
45V100mA
BT1
4.5-6V
CC-BY-SA
osmocom
File: SIMtrace.sch
Sheet: /
Title: SIMtrace hardware
Size: A4
Date: 16 may 2012
Rev: v1.2p
KiCad E.D.A.
Id: 1/1